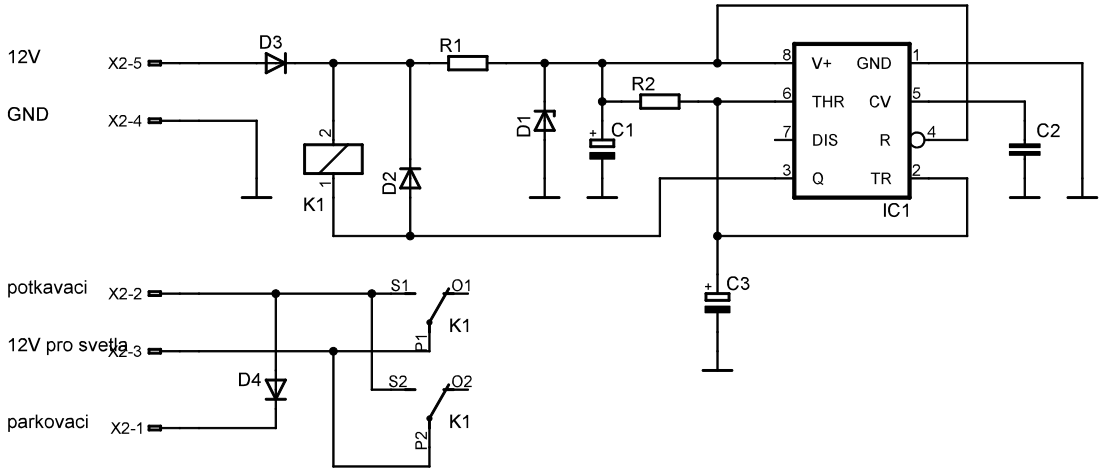
12V
X2-5
GND
X2-4
D3
R1
R2
D1
C1
D2
K1
V+
GND
THR
CV
DIS
R
Q
TR
IC1
C2
C3
potkavaci
X2-2
12V pro svetla
X2-3
parkovaci
X2-1
D4
S1
O1
P1
S2
O2
P2

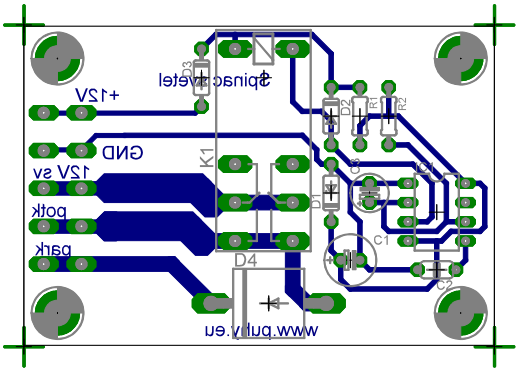
www.pulty.eu
D4
park
potk
12V sv
GND
+12V
K1
D1
D2
D3
R1
R2
C1
C2
K2

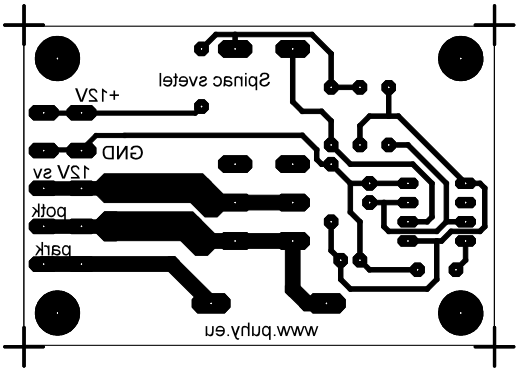
park
potk
12V sv
GND
+12V
Spinac svetel
www.puhy.eu

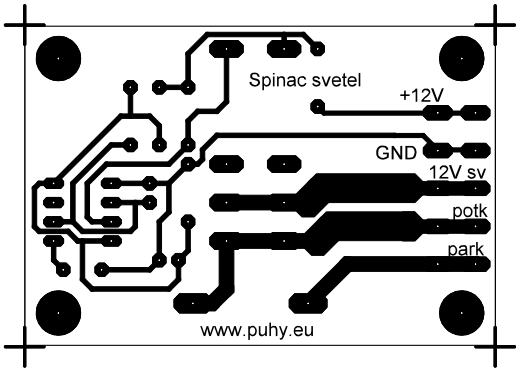

07.07.2007 16:08:57 mirrored C:\Documents and Settings\Honza\Dokumenty\prace\Moje_projekty\spinac_svetel\spinac_sve