JYC Battery Manufacturer Co.,Ltd.

JTX7L-BS (12V7Ah)

Specifications

ModelNO .		JTX7L-BS
Nominal Voltage		12V
RatedCapacity(10 hours rate)		7.0Ah
Dimensions	Length	114mm (4.49 inches)
	Width	69mm (2.72 inches)
	Height	131mm (5.16 inches)
	TotalHeight	131mm (5.16 inches)
Approx. Weight		2.30kg (5.07 Lbs)± 3%
ChargeCurrent(A)	0.7 A (14.4V constant voltage charge)	

Characteristics

Capacity25℃(77℉)	10hours rate(0.7A to 10.5V)	7.0Ah
	5hours rate(1.19A to 10.2V)	5.95Ah
	1C (7.0A to 9.60V)	3.15Ah
	3C (21A to 9.60V)	2.45Ah
Cranking Amperes(by Midtronic Tester)		190A
Cold Cranking Amperes(-18℃ SAE Standard)		100A
Cold Cranking Amperes(-18℃ EN Standard)		100A
Internal Resistance(at 1KHz)		Approx.14.9(mΩ/25℃± 15%
Operating Temperature Range	Charge	0℃(32℉) to 40℃(104℉)
	Discharge	-30℃(-22℉) to 50℃(122℉)
	Storage	-15℃(5℉) to 40℃(104℉)
LifeExpectancy (Cycle Use)	60% depth of discharge 250 cycles	
	30% depth of discharge 400 cycles	
ChargeRetention (self-discharge life) at 20℃ (68℉)	1 month	97%
	3 month	90%
	6 month	80%
Warranty	1 year	
CaseMaterial	ABS	

Dimensions

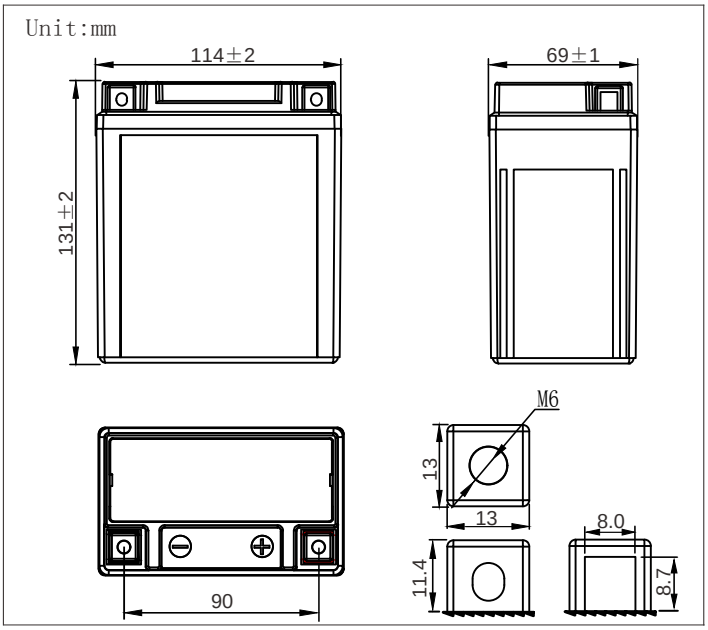
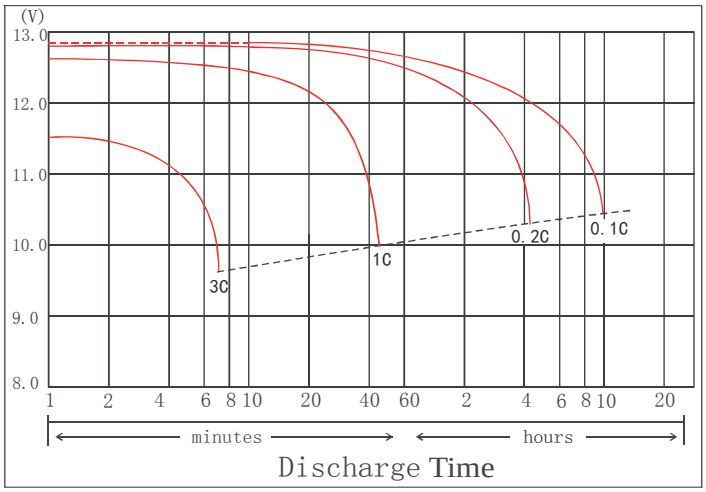
Discharge Time VS.Discharge Current(25℃)