[TRAD] 12V Lithium-Ion Multi Tool

5133001154 - RMT12011L - 5133001154#1

RYOBI

RMT12011L

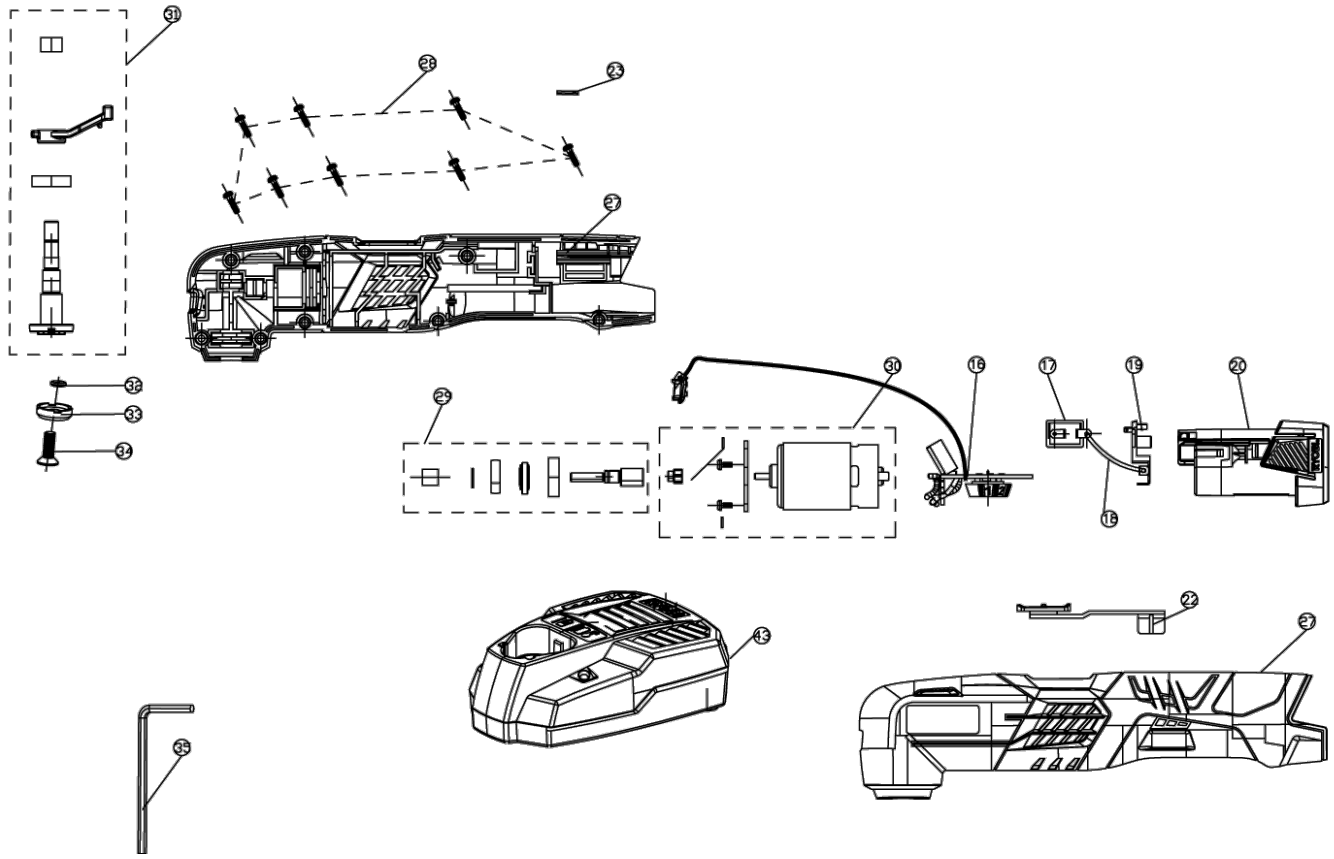

Position	Quantity	Description	Part number	EAN
016	1	ELECTRONIC ELEMENT	5131030106	
017	1	SWITCH	5131030107	
018	1	CONNECTION WIRE	5131030108	
019	1	CONTACT	5131030109	
020	1	BATTERY 12V-DC 1,3AH LI-ION	5131030110	
021	1	LABEL	5131019724	
022	1	SWITCH BUTTON	5131030111	
023	1	CLIP	5131030100	
024+027	1	HOUSING	5131030135	
028	1	SCREW	5131019437	
029	1	CONNECTING SHAFT	5131030104	
030	1	MOTOR ASSEMBLY	5131030105	
031	1	PINION SHAFT	5131030103	
032	1	O-RING	5131030116	
033	1	SLEEVE	5131030117	
034	1	SCREW	5131030118	
035	1	T-HANDLE-KEY	5131029524	
043	1	CHARGER EU 1HR 12V	5131030119	
	1	SANDING PAD	5131030957	
	1	SWISS ADAPTER	5131027809	